230V DIRECT DRIVE

OIL COMPRESSOR

GB

24975 – DA8/118 SPARE PARTS DRAWING

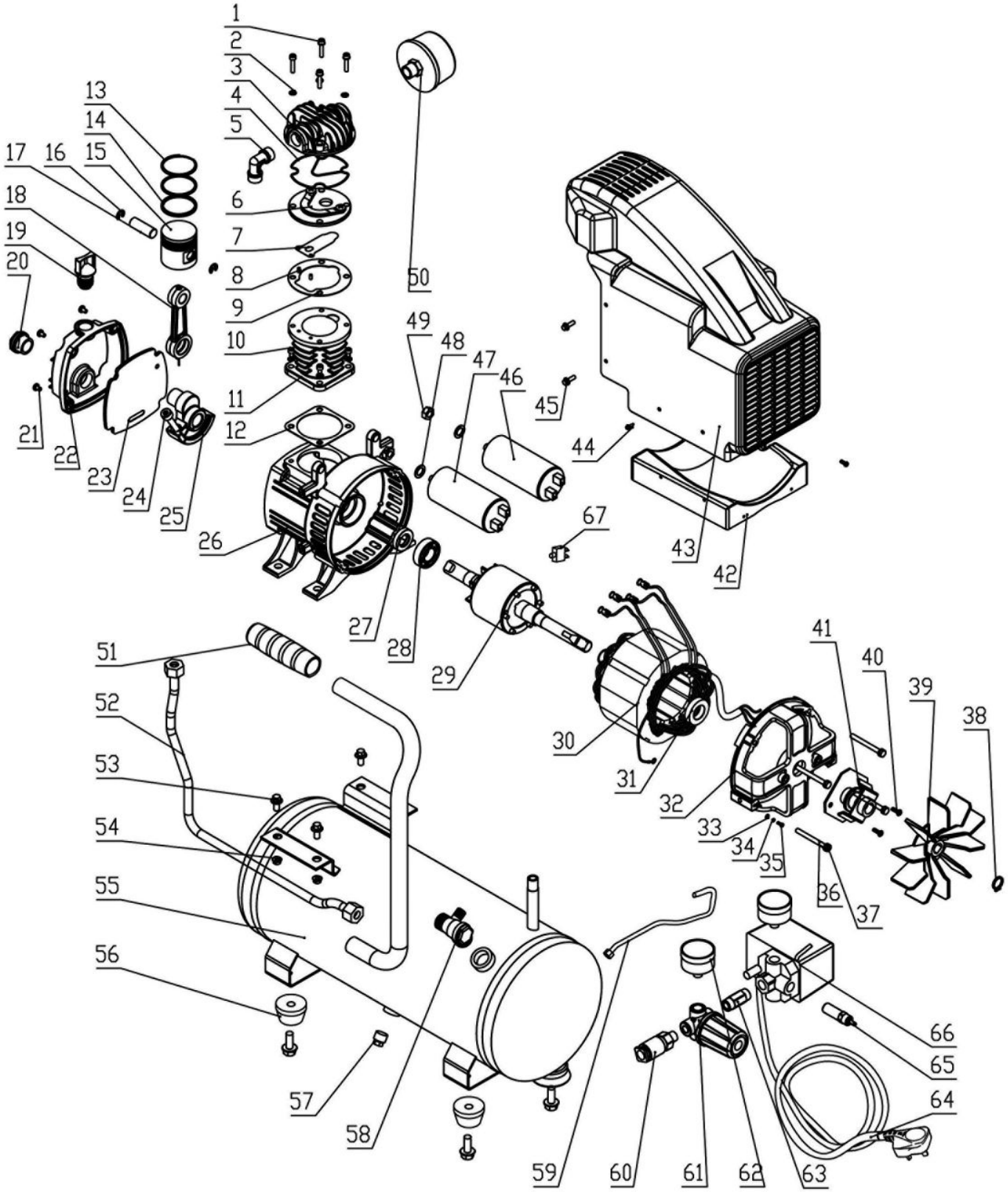

Helpline: +44 (0) 23 8049 4344 Sales Desk: +44 (0) 23 8049 4333 General Enquiries: +44 (0) 23 8026 6355 internet: drapertools.com email: sales@drapertools.com

Draper Tools Limited, Hursley Road, Chandler's Ford, Eastleigh, Hampshire. SO53 1YF UK.

DRAPER®

230V DIRECT DRIVE

OIL COMPRESSOR

GB

24975 – DA8/118 SPARE PARTS LISTING

KEY No.	PART No.	STOCK No.	DESCRIPTION
01	CDA8/118-01	25385	Bolt
02	CDA8/118-02	25386	Washer
03	CDA8/118-03	25387	Cylinder head
04	CDA8/118-04	25388	Cylinder seals
05	CDA8/118-05	25389	Elbow connector
06	CDA8/118-06	25390	Valve plate assembly
07	CDA8/118-07	25392	Valve
08	CDA8/118-08	25393	Locating pin
09	CDA8/118-09	25394	Valve gasket
10	CDA8/118-10	25395	Bolt
11	CDA8/118-11	25398	Cylinder
12	CDA8/118-12	25400	Cylinder gasket
13	CDA8/118-13	25401	Piston ring
14	CDA8/118-14	25402	Oil seal
15	CDA8/118-15	25403	Piston
16	CDA8/118-16	25404	Circlip
17	CDA8/118-17	25405	Piston pin
18	CDA8/118-18	25406	Connecting rod
19	CDA8/118-19	25407	Pipe
20	CDA8/118-20	25409	Vial
21	CDA8/118-21	25410	Screw
22	CDA8/118-22	25411	Crankcase cover
23	CDA8/118-23	25412	Gasket
24	CDA8/118-24	25413	Bolt
25	CDA8/118-25	25414	Crank
26	CDA8/118-26	25415	Crankcase
27	CDA8/118-27	25417	Seal
28	CDA8/118-28	25418	Bearing
29	CDA8/118-29	25419	Stator
30	CDA8/118-30	25421	Field
31	CDA8/118-31	25422	Bearing
32	CDA8/118-32	25423	Motor bracket
33	CDA8/118-33	25426	Washer
34	CDA8/118-34	25427	Washer
35	CDA8/118-35	25428	Screw
36	CDA8/118-36	25430	Washer
37	CDA8/118-37	25431	Bolt
38	CDA8/118-38	25433	Circlip
39	CDA8/118-39	25434	Fan
40	CDA8/118-40	25435	Bolt
41	CDA8/118-41	25436	Centrifugal switch
42	CDA8/118-42	25437	Fan cover mount
43	CDA8/118-43	25438	Fan cover
44	CDA8/118-44	25439	Screw
45	CDA8/118-45	25441	Bolt

KEY No.	PART No.	STOCK No.	DESCRIPTION
46	CDA8/118-46	25442	Capacitor
47	CDA8/118-47	25443	Capacitor
48	CDA8/118-48	25444	Washer
49	CDA8/118-49	25445	Nut
50	CDA8/118-50	25446	Air filter
51	CDA8/118-51	25447	Handle
52	CDA8/118-52	25448	Pipe
53	CDA8/118-53	25449	Bolt
54	CDA8/118-54	25450	Nut steel
55	CDA8/118-55	25451	Tank
56	CDA8/118-56	25453	Foot
57	CDA8/118-57	25454	Drain cock
58	CDA8/118-58	25455	Valve
59	CDA8/118-59	25456	Release pipe
60	CDA8/118-60	25457	Quick coupler
61	CDA8/118-61	25459	Regulator
62	CDA8/118-62	25460	Pressure gauge
63	CDA8/118-63	25461	Connecting pipe
64	CDA8/118-64	25462	Plug and cable
65	CDA8/118-65	25463	Safety valve
66	CDA8/118-66	25464	Pressure switch
67	CDA8/118-67	25465	Thermal overload